Journal of Neuroscience Methods 147 (2005) 75–81

JOURNAL OF NEUROSCIENCE METHODS

www.elsevier.com/locate/jneumeth

A novel device for delivering two-site vibrotactile stimuli to the skin

V. Tannan, R. Dennis, M. Tommerdahl *

Department of Biomedical Engineering, University of North Carolina at Chapel Hill, Chapel Hill, NC 27599, USA

Received 26 January 2005

Abstract

Current methods for applying two-site vibration stimuli to the skin typically involve the use of two separate vibrotactile stimulators, which can lead to difficulty with positioning of stimuli and in ensuring that stimuli are delivered perfectly in phase at the same amplitude and frequency. This report describes the Two-Point Stimulator (TPS) that was developed in order to deliver two-point stimuli to the skin at variable distances between the sites of stimulation on a trial-by-trial basis. The apparatus attaches to a vibrotactile stimulator, modifying it from the standard single probe tip to two probe tips. Each of the two probe tips can be independently positioned to set the tip-to-tip spacing. Both points of the TPS are driven by the single vibrotactile stimulator and distances between the two sites can be varied on a trial-by-trial basis. To test the device, a modified Bekesy tracking method was developed and used for two-point limen testing under stimulus conditions of varying amplitude and frequency. Data collected were consistent with previously published reports, suggesting that one possible use of the device would be to provide a means for improved measures of spatio-tactile acuity.
© 2005 Elsevier B.V. All rights reserved.

Keywords: Tactile; Tactile stimulator; Somatosensory; 2-pt stimulation; Spatial acuity

1. Introduction

The delivery of sinusoidal displacements to a single skin site via mechanical transducer has been used extensively for the study of flutter vibration in both psychophysical and neurophysiological settings. Typically, stimuli that can be delivered through mechanical transducers – vertical displacement stimulators such as the one originally described by Chubbuck (1966)—that are used for studies of somatosensation are very well equipped to deliver sinusoidal stimuli at a frequency range (1–250 Hz) with amplitudes of sufficient size (between 0 and 1000 μm) to activate a broad range of mechanoreceptors. However, in order to stimulate more than one skin site – either during the course of human psychophysical testing or animal experimentation – it is necessary to position a second vertical displacement stimulator over a second skin site. Consequently, studying the effects of varying the distance between two stimulated skin sites can become cumbersome each time the investigator has to reposition the actual stimulators. A second problem that results from the use of two stimulators is that some effort must also be made in order to deliver the two stimuli perfectly in phase at the same amplitude and frequency. In order to allow for the development of experimental protocols that compare the effects of delivering identical stimuli spaced at variably spaced distances on a trial-by-trial basis, we designed and fabricated the Two-Point Stimulator (TPS) that attaches to the end of a vertical displacement stimulator. Both points of the TPS are driven by the single vertical displacement stimulator and distances between the two sites can be varied on a trial-by-trial basis. The device is described, and in order to test the device, a Bekesy tracking protocol was used to generate preliminary psychophysical data measuring the two-point limen under three different stimulus conditions. Data collected for this study were consistent with previously published reports, in which the distance between two skin sites was varied manually and spatial acuity improved when the two probes

* Corresponding author. Tel.: +1 919 966 8985.
E-mail address: mark_tommerdahl@med.unc.edu (M. Tommerdahl).

0165-0270/$ – see front matter © 2005 Elsevier B.V. All rights reserved.
doi:10.1016/j.jneumeth.2005.05.001

were oscillated (Solomonow et al., 1977; Vierck and Jones, 1970).

2. Materials and methods

2.1. Stimulator

The TPS is composed of two independently controlled devices. The first, the Cantek Metatron CS-525 vertical displacement stimulator (Cantek Metatron Corp., Canonsburg, PA), has been used in a number of previously reported studies and its use in our laboratory has been described recently (Tommerdahl et al., 2005). The device itself is based on a device first described by Chubbuck (1966). The vertical displacement stimulator delivers a stimulus in the range of 1–250 Hz via cylindrical probe. A second device attaches to the vibrating tip of the Cantek, modifying it from the standard single probe tip to two probe tips, each capable of moving independently laterally to set the tip-to-tip spacing (see Fig. 1).

A program written in LabVIEW sends digital signals from a computer, through a data acquisition system (National Instruments PCI 6025E), to the TPS. For each of the two tips, two single-bit digital signals are required: one to specify direction of motion, and another to command the tip movement at a pre-set speed. These signals are sent to a custom step motor driver circuit board interfaced with PIC

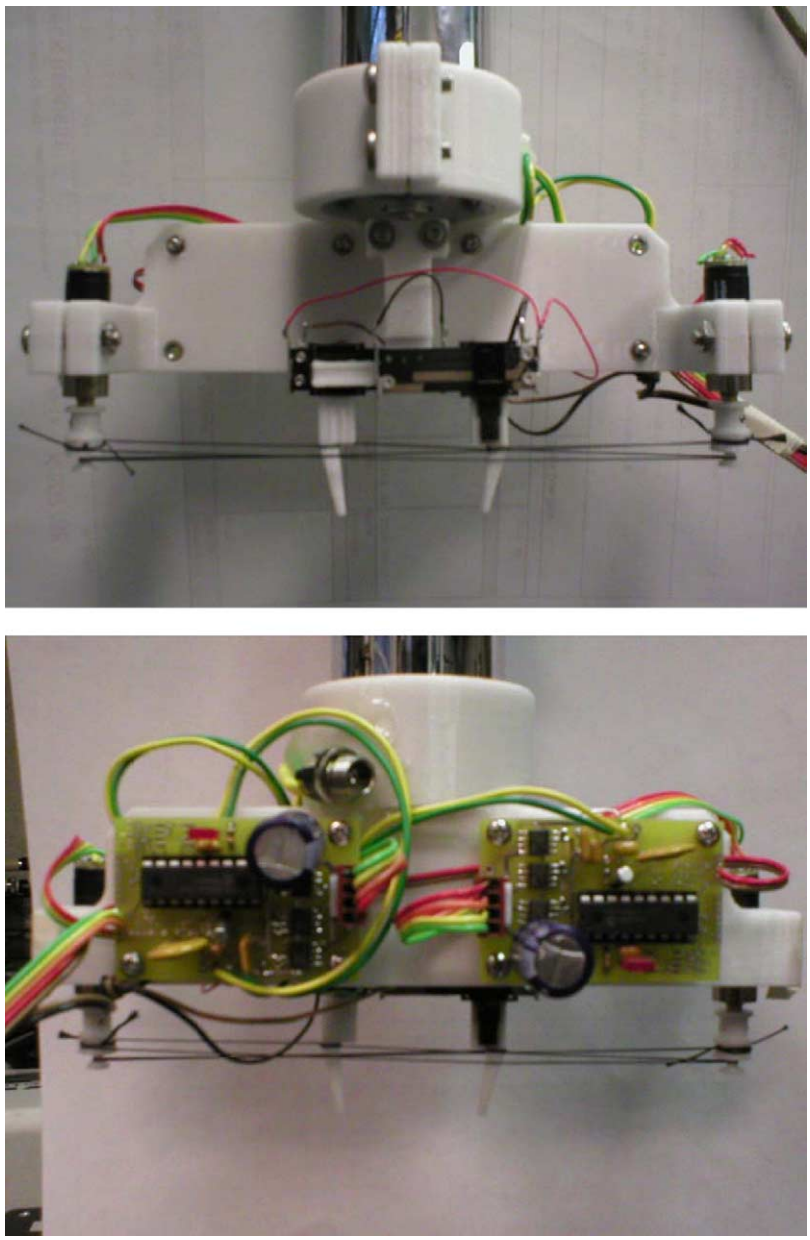

Fig. 1. Images of the front and back of the Two-Point Stimulator as attached to a vibrotactile stimulator.

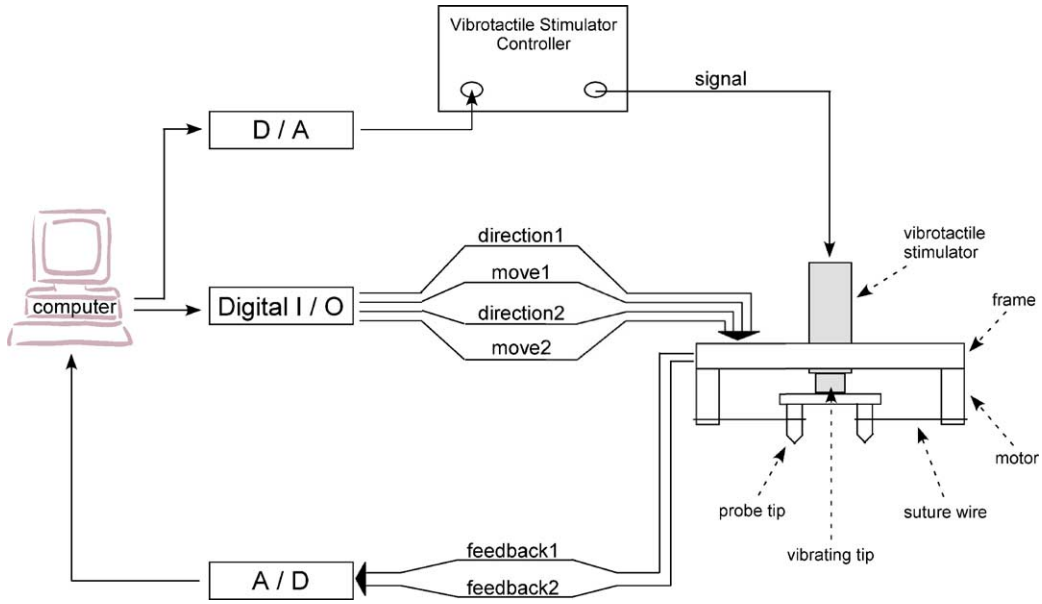

Fig. 2. Block diagram of control system for the Two-Point Stimulator. The stimulus signal is sent from the computer to a D/A, and then to the vibrotactile stimulator controller, which controls the displacement of the vibrotactile stimulator. Four single-bit digital signals, used for direction and motion control of the probe tips, are transmitted by the computer to the two-point stimulator. As each stepper motor turns in the direction determined by the digital signals, the gear head turns a capstan wound with 2-0 braided silk suture to drive the corresponding probe tip in that direction. The suture runs on a pulley and the capstan on the motor gear output shaft, and is affixed to the probe tip. A mirror image mechanical arrangement drives the other probe tip. Two feedback lines, indicating spatial position of each probe tip, are sent back to the computer via an A/D.

microprocessors that control each of two separate gear-head stepper motors (Micro-Mo model #: AM1020-V-6-65-08 10/1 64:1) mounted on the framework (see Fig. 2).

As each stepper motor turns in the direction determined by the digital signals, the gear head turns a capstan wound with 2-0 braided silk suture to drive the corresponding probe tip in that direction. The suture runs on a pulley and the capstan on the motor gear output shaft, and is affixed to the probe tip. A mirror image mechanical arrangement drives the other probe tip. This mechanical arrangement removes the motor mass from the vibrating tip to minimize the tip mass, thus maximizing the vibration bandwidth.

Each probe tip slides on a linear potentiometer (DigiKey P/N: CT2302-ND), which serves as both a linear slide and a linear position sensor (see Fig. 3). Each linear potentiometer generates an analog voltage linearly proportional to the spatial position of the tip. This position voltage is sampled through a 12-bit A/D as feedback to the computer and processed by an algorithm to indicate the location, in mm, of a probe tip. The two tips are capable of a maximum separation of 40 mm and a minimum separation of 0 mm (at which the tips are flush). As a tip moves from 0 to 20 mm, the position voltage ranges from 0 to 5 V, respectively.

The mechanism hardware and attachment fixtures were built using a StrataSys Fusion Deposition Modeler (FDM) (StrataSys model Titan-T1) with polycarbonate material. Solid models were generated using SolidWorks 2004 (professional version) and converted to *.STL files for rapid manufacturing on the FDM. The Statasys FDM was employed only because it allowed the rapid manufacture of this device. Several prototypes were designed, manufactured, assembled, and tested in less than 1 week. Though other methods of manufacture, such as the use of traditional chip-forming machining processes, could also produce a functionally identical device, the system development time would have been considerably longer.

Amplitude, frequency, and offset, which can be varied on a trial-by-trial basis, are delivered directly to the vibrotactile stimulator, allowing both probe tips to operate simultaneously and with identical displacement. For psychophysical applications, several methods currently used for testing spatial acuity require the investigator to apply stimuli to the subject by hand (e.g., the Two-Point Discrimination test—for recent review of its use, see Lundborg and Rosen, 2004). This device improves the consistency of the stimulus intensities delivered to the skin, as the two stimuli are always displaced under a single stimulus condition. The separation of the probe tips ranges from 0 to 40 mm and min-to-max separation occurs in 2.5 s. Percent error of separation, stemming from the voltage output variability of the linear pots, is measured to be ±1% for any given displacement. Dual foil leaf contacts on each sliding contact of the linear potentiometers eliminates voltage dropout during tip movement as well as during vibration of the head. A key consideration during device design was the amount of weight placed upon the vibrotactile stimulator, as excessive weight on the vibrating tip results in irregular tip displacement. Therefore, all circuitry, including the motors, are mounted on a frame which attaches to the body of the vibrotactile stimulator. The only weight placed upon the vibrating tip is that of the probe tips and the linear pots.

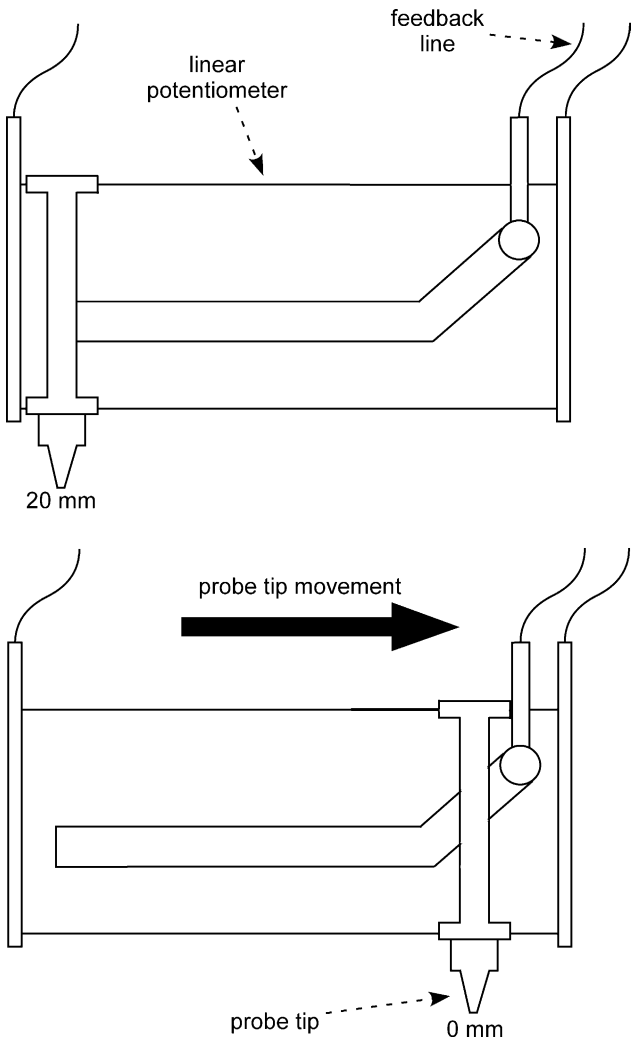

Fig. 3. Each probe tip slides on a linear potentiometer, which serves as both a linear slide and a linear position sensor. Each linear potentiometer generates an analog voltage linearly proportional to the spatial position of the tip. This position voltage is sampled through a 12-bit A/D as feedback to the computer and processed by an algorithm to indicate the location, in mm, of a probe tip. The two tips are capable of a maximum separation of 40 mm and a minimum separation of 0 mm (at which the tips are flush). As a tip moves from 0 to 20 mm, the position voltage ranges from 0 to 5 V, respectively.

This weight load difference from typical probe tips does not significantly affect the performance of the vibrotactile stimulator, this being confirmed by monitoring of the vibrating tip displacement over the frequency range used.

2.2. Experimental setup

Four naïve subjects (20–26 years in age) participated in this psychophysical study. All procedures were reviewed and approved in advance by an institutional review board.

Sinusoidal vertical skin displacement stimuli were delivered using the Cantek Metatron CS-525 vertical displacement stimulator (Cantek Metatron Corp., Canonsburg, PA). The stimulator made contact with the skin via the two tips of the Two-Point Stimulator attachment (2.5 cm long, diameter 2 mm) fitted to the terminal end of the moving shaft of the stimulator transducer. An adjustable mechanical arm with lockable joints mounted to a free-standing, rigid platform (fabricated locally) enabled convenient adjustment and maintenance of stimulus position.

The subject was seated in an adjustable dental chair and the right arm was placed on an X-ray bag filled with glass beads. The investigators molded the bag to fit the contours of the subject's arm, and when the subject was comfortable and the arm positioned appropriately to allow unimpeded access of the stimulator to the center of the dorsal surface of the right hand, the bag was made rigid by evacuating it of air (achieved by connecting the bag to a vacuum line). In this way the arm was maintained in a comfortable but stable position for the full duration of the experimental session. The subject was unable to see either the experimenter or the stimulator and stimulus control instrumentation. White noise presented via headphones eliminated potential auditory cues. A micrometer permitted the stimulator transducer and probe assembly to be lowered towards the predefined skin site. The micrometer position at which the digital display on the stimulator controller registered a 0.l–0.2 g change in resistive force was interpreted as the point at which the stimulator probes made initial contact with the skin.

A tracking protocol was used to conduct a two-point limen test, which determines the "least two-point separation at which the subject feels (has the subjective impression of) two points," (Johnson and Phillips, 1981) at the dorsal surface of the right hand. For each run, the two probe tips were initially spaced 30 mm apart. The stimulus signal was delivered from a computer via a D/A (National Instruments PCI-6722) to the vertical displacement stimulator. The stimuli were presented to the skin for 1 s at an offset of 500 μm then completely removed from the skin for 1 s at an offset of −500 μm. The subject was given these 2 s to report feeling one or two points – no button press for one point; button press for two points. The response signal was transmitted back to the computer and processed with an algorithm written in LabVIEW. When two points were detected, the two probe tips moved closer together by a step (1 step = 1 mm); when only one point was detected, the two points moved farther apart by a step. The computer controlled the positioning of the probes with a closed-loop control algorithm. The probe tips remained off the skin for the tip movement duration of 1 s, thus the inter-stimulus interval lasted for a total of 2 s. This process was repeated until a threshold could be determined, usually around 30 trials, hence a single run took approximately 90 s. The inter-run interval was 60 s in duration. The two-point limen was measured under three conditions of amplitude and frequency: static (no vibration), 25 Hz–100 μm, and 200 Hz–20 μm (see Fig. 4). In a session, three runs were conducted, each with one of the aforementioned stimulus conditions. Order of stimulus conditions within a session was randomized and varied for each subject.

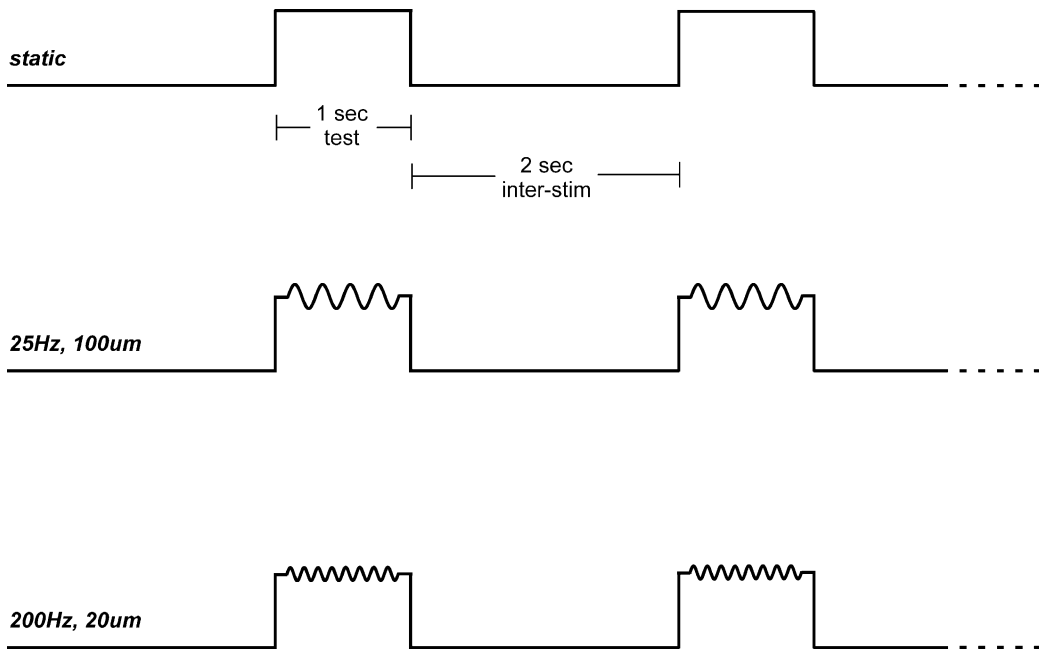

Fig. 4. A tracking protocol was used to conduct a two-point limen threshold test. Thresholds were measured under three conditions of amplitude and frequency: static (no vibration), 25 Hz–100 μm, and 200 Hz–20 μm. A single trial consisted of stimuli presented to the skin for 1 s, and then completely removed from the skin for an inter-stimulus interval of 2 s.

3. Results

The Two-Point Stimulator (TPS) was used in preliminary psychophysical studies to determine the feasibility of simultaneously delivering vibrotactile stimuli at two independently positioned skin sites. Bekesy tracking algorithms were used to find a subject's two-point limen at the dorsal surface of the right hand. Fig. 5 shows exemplary results of one session (three runs) for each of the four subjects. In one run, the subject was tracked to a "static" stimulus – a stimulus that did not vibrate at any frequency. In the other two runs tracking was observed while the probes were vibrated at 25 and

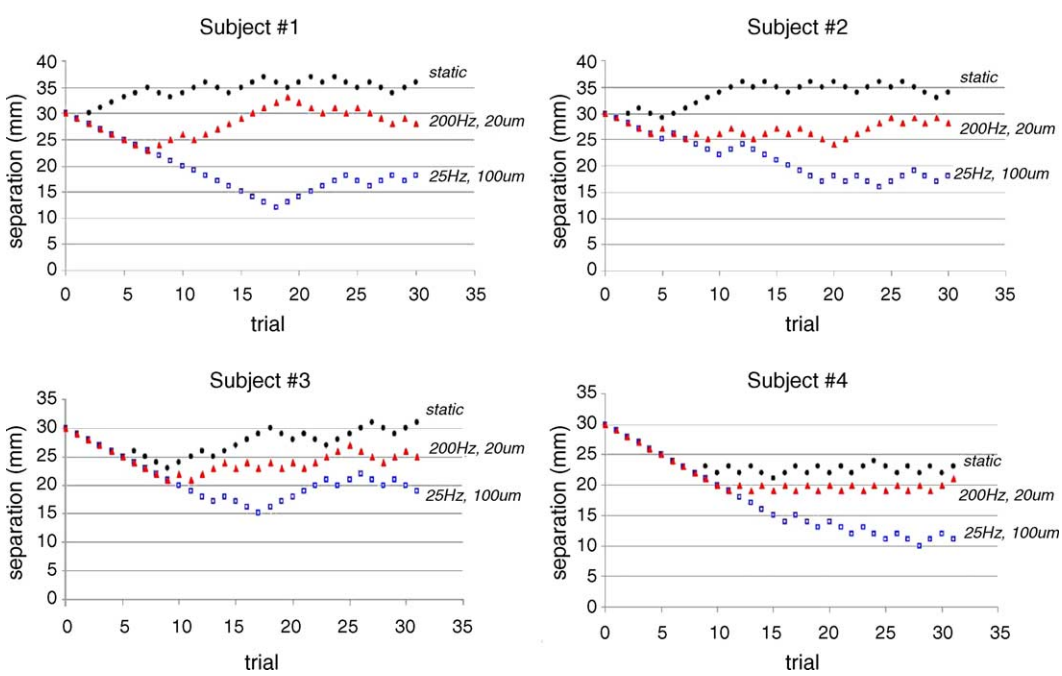

Fig. 5. Tracking data from one session is shown as measured from four subjects. The three traces indicate change in separation (mm) between the two stimuli over time for the stimulus conditions of static, 25 Hz–100 μm, and 200 Hz–20 μm. Note that in each case, the 25 Hz condition yields a two-point limen < 200 Hz condition < static condition.

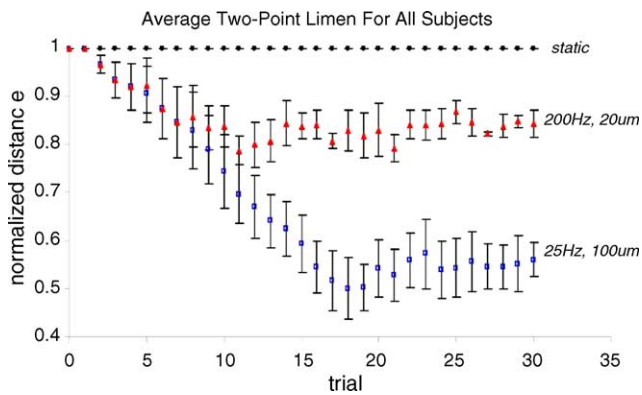

Fig. 6. Average of two-point limen tracking across all subjects. All distances are normalized to the two-point distance recorded under the static condition. Standard error bars demonstrate that across-subject variability for the two-point limen tracking method is fairly consistent.

200 Hz, respectively. For example, subject 1 (see Fig. 5) was unable to detect the presence of two points under the static condition until the separation was increased to around 35 mm, whereas for 25 and 200 Hz vibration the separation required was around 16 and 28 mm, respectively. In each case, oscillating the probes (at the same phase) results in the two-point limen being reduced. Additionally, in all sessions of all subjects run thus far, the two-point limen for the 25 Hz run is always less than that acquired for the 200 Hz run, and both the 25 and 200 Hz conditions always yield two-point limen that are less than that obtained in the static condition.

To determine the across-subject consistency of the above findings, we averaged the tracking responses to the two-point limen from the data, shown in Fig. 6. In order to adjust for individual differences in sensitivity, the data was normalized to the static condition, primarily because we are most interested in the effect caused by changing the stimulus condition from static to oscillating on the subject's response. Thus, the

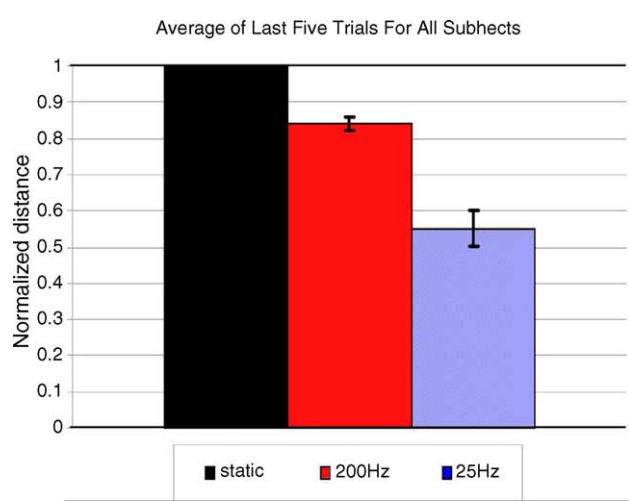

Fig. 7. Average two-point limen. Data displayed is average of last five trials across all subjects ($n = 4$). All data is normalized, and is plotted as a proportion of the distances recorded under the static condition.

two-point limen for the static condition is always defined as a "1" and all other distances are plotted as a proportion of the values obtained under the static condition. Fig. 6 displays the average of two-point limen for all four subjects. Note that the two-point limen was reduced for the 200 Hz condition, but least (highest spatial acuity) for the 25 Hz condition. In the 25 Hz condition, the two-point limen tracks between 50 and 60% of the static condition, indicating a 40–50% improvement that can be attributed to the oscillation of the probe. The results of the tracking experiments are summarized in Fig. 7. In Fig. 7, the average of the two-point distance of the last five trials for all subjects is compared. Clearly, there is a significant reduction in the two-point limen under both the 25 Hz (45% reduction) and 200 Hz (16% reduction) condition.

4. Discussion

The device described in this report has been designed to deliver two-point stimuli to the skin. The apparatus attaches to a vibrotactile stimulator, modifying it from the standard single probe tip to two probe tips, each capable of moving independently laterally to set the tip-to-tip spacing. Both points of the TPS are driven by the single vibrotactile stimulator and distances between the two sites can be varied on a trial-by-trial basis. The device demonstrated capability of repositioning the two probes on a trial-by-trial basis with an inter-trial interval of 2 s, and the probes were variably separated in increments of 1 mm. Since the two probes can be independently positioned, studies that require vibrotactile stimulation to be delivered to dual skin sites at different positions, variable on a trial-by-trial basis, can now be performed. One other device that allows for multiple stimuli to be delivered to the skin was reported by Bensmaia et al., (2004), and the device that they report consists of 400 independently controlled probes arrayed in a 20 by 20 array. However, as spacing of the probes in that device are at 0.5 mm, center to center, the largest probe to probe distance that can be achieved is 10 mm. While the dense probe device is well suited for presenting multiple stimuli at high resolution to the skin, the 10 mm distance is a limitation for researchers who would prefer to deliver stimuli farther apart. Other devices have been described that stimulate multiple sites, but in general, these devices are not appropriate for studies of two point discrimination (Kaczmarek and Haase, 2003; Rinker and Craig, 1994). Two significant limitations exist for the device described in this report. First, the device is only appropriate for stimulation presented in displacement rather than force mode. Second, the device will only apply identical indentations (with respect to pressure) for uniform flat surfaces.

In order to test the device, a modified Bekesy tracking method was developed and used for two-point limen testing under stimulus conditions of varying amplitude and frequency. Data obtained was similar to that previously published on the subject of improvements of spatial acuity with frequency of stimulation (Solomonow et al., 1977; Vierck

and Jones, 1970). Vierck and Jones found that two-point discrimination (TPD) was better when the two points, delivered simultaneously, were vibrated at 300 Hz than under the static condition and TPD was best when delivered at 10 Hz. Currently, the data we have collected from four subjects (back of the hand) has been consistent with the Vierck and Jones study (1970). The two-point thresholds for stimulus conditions are similar and robust for all subjects, as threshold was highest for the static condition, lower for the 200 Hz condition, and lowest for the 25 Hz condition. Thus, although the tracking algorithm in this study was much simpler and quicker than the protocol described by Vierck and Jones (1970) in their TPD assessment, primarily due to the automation of the stimulus localization, the results are in general agreement.

The TPD test is widely used for measuring spatio-tactile acuity and can be especially useful for assessing sensibility and innervation density. Currently, the common method of applying a TPD test is through use of handheld instruments (i.e. two-point calipers, "two-point discriminator"), of which a user applies to the subject by hand during an experiment. Lundborg and Rosen (2004), in a recent review of TPD methods, suggest several concerns with current methods for assessing TPD testing, and these concerns originate primarily from human error in administering the TPD or applying inconsistent pressure to the two stimulus locations, inconsistent amplitude of stimuli and non-synchronous application of the two points. In addition to problems with administration of the TPD test, Craig and Johnson (2000) found a number of problems with both the subjective and objective methods of subjects reporting their responses. In this study, the subjects were presented with two points at varying separation and asked to report feeling one or two points. Through this subjective method, a tracking protocol allows two-point limen to be determined. It would also be possible, with this device, to conduct experiments that would utilize an objective method, using a two-alternative forced choice protocol (subject would be presented with two points in one interval and one point in the other, and then asked to report the interval that included two points). Regarding the subjective method, such as that used in this study, a severe problem is that perception of two points gradually changes as the point separation varies. Also, variability in discrimination is usually high within and between subjects. Two important drawbacks to using the objective method were noted by Craig and Johnson (2000) as well. First, a previous study by Johnson and Phillips (1981) had reported the two-point threshold on the fingertip to be zero, whereas a number of psychophysical studies using the objective method had reported threshold to be greater than zero. To explain this inconsistency, the objective method must be measuring a phenomenon other than spatial resolution. Second, other cues (mainly intensity cues) created by the objective method allow subjects to discriminate between one and two points, thereby confounding the actual measure of spatial acuity. Although these concerns are important to consider, our goal in designing the Two-Point Stimulator device was simply to offer a more efficient way to deliver two-point stimulation to the skin. We believe that better methods for testing spatio-tactile acuity can be derived from such stimulators, as a number of errors, particularly those that are human in origin, can be eliminated with this automated device.

Acknowledgement

Supported, in part, by NIH RO-1 grant NS043375 (MT, P.I.).

References

Bensmaia SJ, Craig JC, Yoshioka T, Johnson KO. SA and RA contributions to the tactile perception of grating orientation. In: Proceedings of the 34th Annual Meeting Society for Nueroscience; 2004. p. 59.7.

Chubbuck JG. Small-motion biological stimulator. APL Tech Digest 1966:18–23.

Craig JC, Johnson KO. The two-point threshold: not a measure of tactile spatial resolution. Curr Direct Psychol Sci 2000;9(1):29–32.

Johnson KO, Phillips JR. Tactile spatial resolution. I Two-point discrimination, gap detection, grating resolution, and letter recognition. J Neurophysiol 1981;46(6):1177–91.

Kaczmarek K, Haase S. Pattern identification as a function of stimulation current on a fingertip-scanned electrotactile display. IEEE Trans Neural Syst Rehab Eng 2003;11(3):269–75.

Lundborg G, Rosen B. The two-point discrimination test—time for a re-appraisal? J Hand Surg 2004;29(5):418–22.

Rinker M, Craig J. The effect of spatial orientation on the perception of moving tactile stimuli. Percept Psychophys 1994;56(3):356–62.

Solomonow M, Lyman J, Freedy A. Electrotactile two-point discrimination as a function of frequency, body site, laterality, and stimulation codes. Ann Biomed Eng 1977;5(1):47–60.

Tommerdahl M, Favorov OV, Whitsel BL. Effects of high-frequency skin stimulation on SI cortex: mechanisms and functional implications. Somatosens Motor Res 2005;22(1):1–19.

Vierck Jr CJ, Jones MB. Influences of low and high frequency oscillation upon spatio-tactile resolution. Physiol Behav 1970;5:1431–5.